Liquid-in-Glass Industrial Thermometers

Original Publication 1962

Disclaimer

MCAA, the Measurement, Control & Automation Association, provides this document as an information guide only. It should not be relied upon or used as a substitute for research or independent, professional advice. Since its original publication many years ago, it has been declared obsolete by the organization that created it. That organization will no longer permit its name to be associated with the document. MCAA has acquired the rights to several documents and offers them to the public as information guides only.

Terminology, techniques or technology mentioned in this document may no longer be applicable or up-to-date and the reader is cautioned to draw only limited inferences therefrom and to bear in mind the length of time that has elapsed since this document was first developed. The reader is further cautioned to use or seek professional advice before using or implementing any of the information contained herein.

MCAA makes no representations, warranties or guarantees to the reader with respect to the content, accuracy or completeness of this material and strongly cautions the reader to use this document as an information guide only. MCAA disclaims any warranty, express or implied, including but not limited to, an implied warranty of accuracy or fitness of the document in whole or in part, whether in text, graphs, diagrams or otherwise.

MCAA is not responsible for any loss or damage caused to any person as a result of the use of any information contained in this document. The user assumes all risk and liability for any loss or damage caused to any person as a result of the use of the information contained herein.

The Measurement, Control & Automation Association is a national trade association whose members are manufacturers and distributors of instrumentation, systems and software used in industrial process control and factory automation worldwide. The Association helps the management teams of process and factory automation product and solution providers run and grow successful businesses by offering timely, unique and highly specialized resources acquired from shared management benchmarks and strategies where proprietary company information is secure. MCAA can be contacted through its website at www.measure.org

The Measurement, Control & Automation Association
P.O. Box 3698
Williamsburg, VA 23187
Voice and Fax: (757) 258-3100 – mcaa@measure.org
Visit our Website at http://www.measure.org

1. Scope and Purpose

1.1 This standard applies to Liquid-in-Glass Industrial Thermometers for use in industry.

1.2 The purpose of this standard is to establish uniformity of terminology, (including symbols) definitions and dimensions.

2. General Definitions

2.1 Liquid-in-Glass Industrial Thermometer. A Liquid-in-Glass Industrial Thermometer is a temperature measuring instrument comprising a Glass Thermometer Tube, an appropriate scale in a protective Case, and a Bulb designed for use with industrial equipment. (See Fig. 1.)

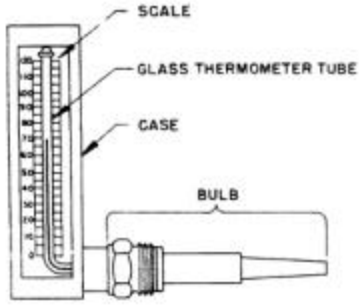

LIQUID-IN-GLASS INDUSTRIAL THERMOMETER
FIG NO. 1

2.1.1 *Glass Thermometer Tube.* A Glass Thermometer Tube is a temperature measuring component containing a liquid fill and comprising a temperature sensitive glass bulb, a connecting stem tube, and a scale tube in which the liquid column is observed as an indication of temperature. (See Fig. 2.) The scale tube usually comprises a magnifying lens for better visibility of the liquid column.

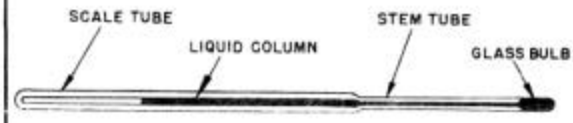

GLASS THERMOMETER TUBE
FIG. NO. 2

2.1.2 *Bulb.* A Bulb is composed of a Sensitive Portion (bulb chamber or guard) and an Extension. The two commonly used Bulbs are Plain and Union Connected. (See Fig. 3.)

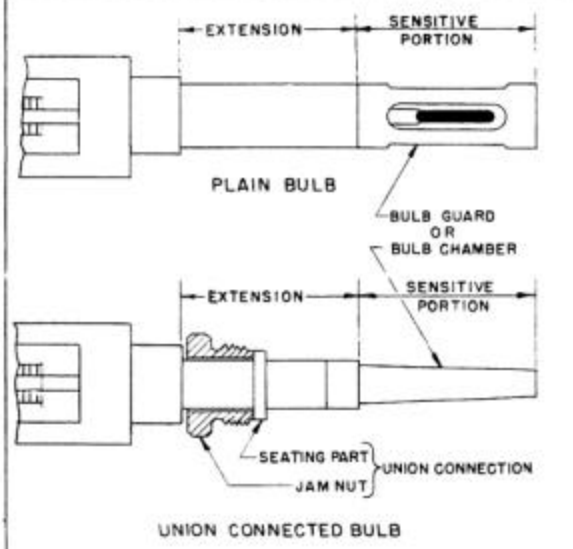

TYPES OF BULBS
FIG. NO. 3

2.1.2.1 *Sensitive Portion.* A Sensitive Portion is that portion of a Bulb enclosing the temperature sensitive glass bulb. Where a bulb chamber is used, the space between the glass bulb and the inner walls of the bulb chamber is usually filled with a heat conducting medium. Where a bulb guard is used, the Sensitive Portion is either perforated or slotted to expose the glass bulb. (See Fig. 3.)

2.1.2.2 *Extension.* An Extension is that portion of a Bulb enclosing the stem tube connecting the glass bulb to the scale tube and extending from the Sensitive Portion to a connecting unit, or to the Case directly if no such connecting means is used. (See Fig. 3.)

2.1.3 *Case.* The Case is a protective housing within which the scale tube and a graduated Scale are mounted. The Case is designed to permit viewing of the liquid column with reference to the graduated Scale and is usually furnished with a transparent window. (See Fig. 1.)

2.1.4 *Scale.* The Scale is a member having graduations and numerals by means of which the height of the liquid column is translated into degrees of temperature. (See Fig. 1.)

3. Definitions of Case Forms

3.1 Case Form. The Case Form of the thermometer is determined by the orientation of the Bulb with respect to the Case front.

3.1.1 *Straight Form.* A Straight Form thermometer is one in which the Bulb projects from the bottom of the Case in a line parallel to the face of the thermometer. (See Fig. 4.)

3.1.2 *90° Back Angle Form.* A 90° Back Angle Form thermometer is one in which the Bulb projects from the lower back of the Case at a 90 degree angle. (See Fig. 4.)

3.1.3 *90° Right Side Angle Form.* A 90° Right Side Angle Form thermometer is one in which the Bulb projects from the lower right side of the Case at a 90 degree angle, as viewed from the front. (See Fig. 4.)

3.1.4 *90° Left Side Angle Form.* A 90° Left Side Angle Form thermometer is one in which the Bulb projects from the lower left side of the Case at a 90 degree angle, as viewed from the front. (See Fig. 4.)

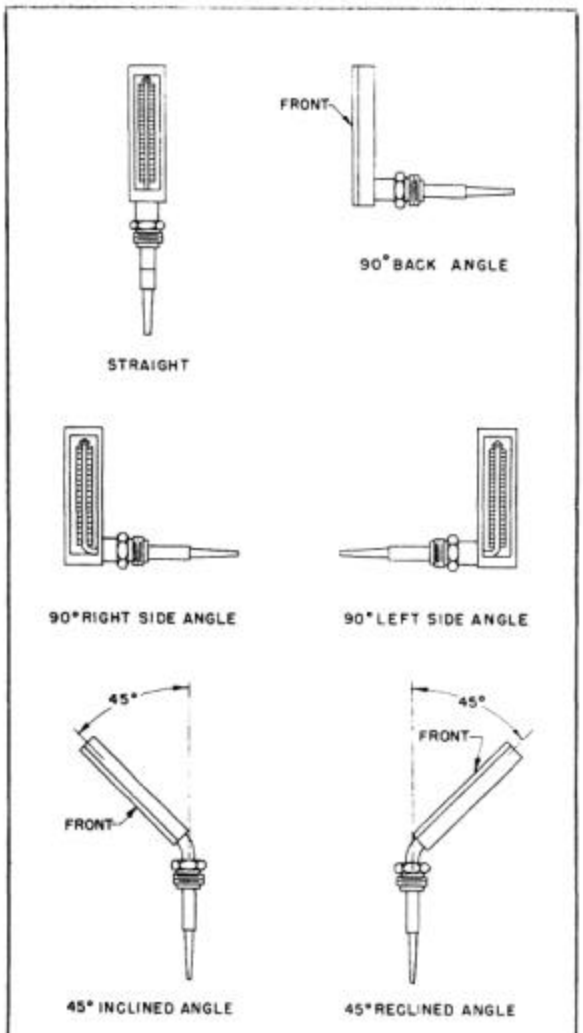

CASE FORMS
FIG. NO 4

3.1.5 *45° Inclined Angle Form.* A 45° Inclined Angle Form thermometer is one in which the front of the Case is tilted forward through an angle of 45 degrees with respect to the centerline of the Bulb. (See Fig. 4.)

3.1.6 *45° Reclined Angle Form.* A 45° Reclined Angle Form thermometer is one in which the front of the Case is tilted backward through an angle of 45 degrees with respect to the centerline of the Bulb. (See Fig. 4.)

4. Definitions of Bulbs and Fittings

4.1 Union Connected Bulb. A Union Connected Bulb is one using a jam nut and seating part for connecting the thermometer to a Bushing, Flange or Well. (See Fig. 3.)

4.1.1 *Bushing.* A Bushing is a fitting provided with external threads for attachment to a vessel and with internal threads and seating means for mounting a temperature sensing element therein. A Bushing does not have a pressure-tight sheath below the external threads. (See Fig. 5.)

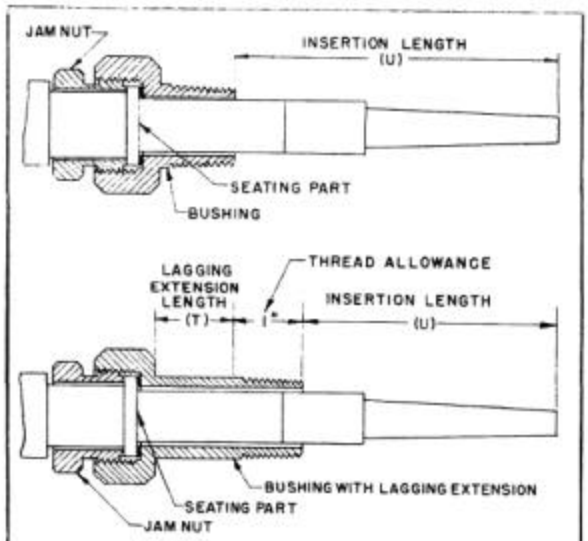

UNION CONNECTED BULB WITH BUSHING

FIG NO.5

4.1.2 *Flange.* A Flange is a fitting provided with a flanged surface for attachment to a vessel and with internal threads and seating means for mounting a temperature sensing element therein. A Flange does not have a pressure-tight sheath below the flanged surface. (See Fig. 6.)

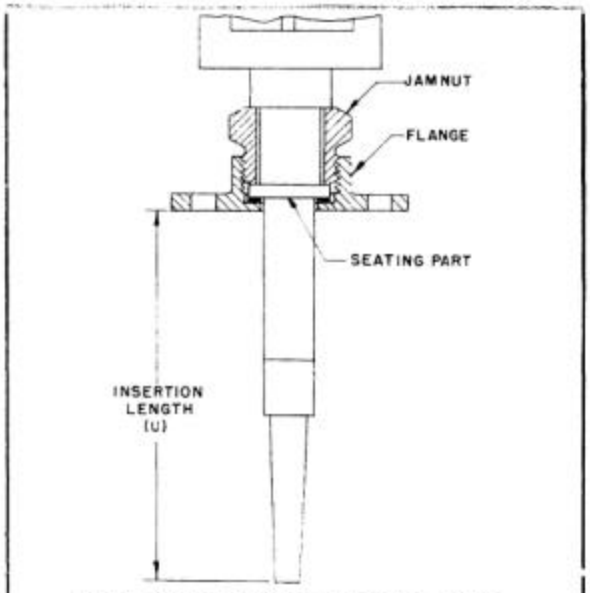

UNION CONNECTED BULB WITH FLANGE

FIG. NO. 6

4.1.3 *Well.* (Separable Socket) A Well is a pressure-tight receptacle adapted to receive a temperature sensing element and provided with external threads or other means for pressure-tight attachment to a vessel. (See Fig. 7.)

4.1.4 *Lagging Extension.* A Lagging Extension is that portion of a Bushing or Well, above the external threads, intended to extend through the lagging of a vessel. (See Figs. 5 and 7.)

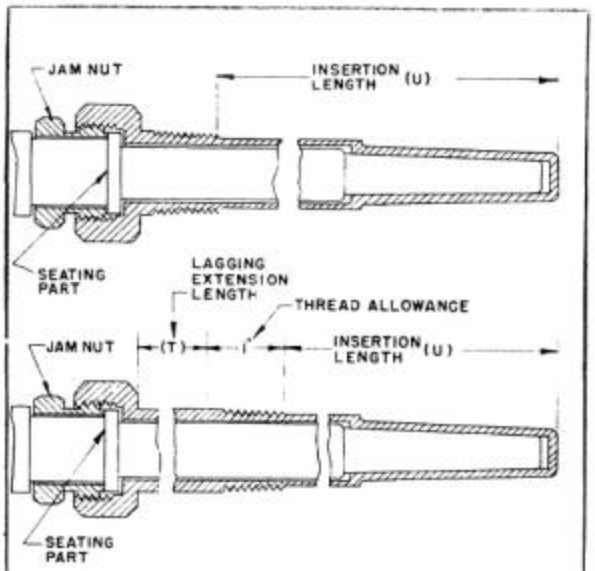

UNION CONNECTED BULB WITH WELL

FIG. NO. 7

4.2 Plain Bulb. A Plain Bulb is one not provided with a threaded connection or other means of attachment to a vessel. Installation of a thermometer having this type of Bulb is generally by means of an adjustable clamp or flange. (See Fig. 8.)

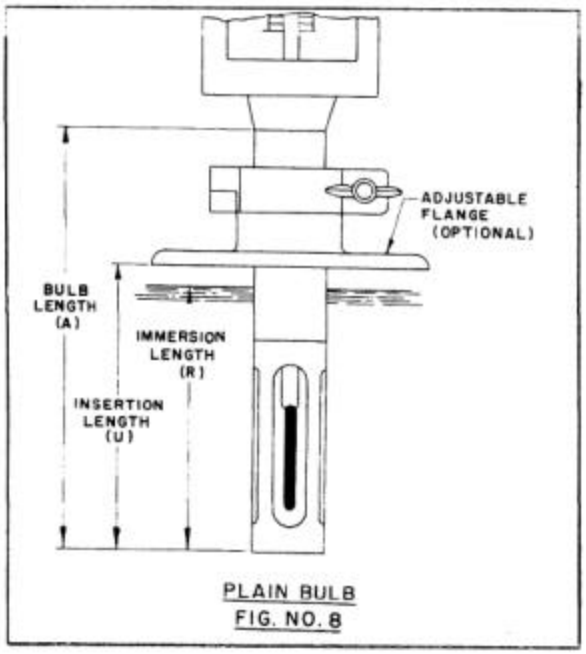

PLAIN BULB
FIG. NO. 8

5. Definitions of Dimensions

5.1 Bulb Length. The Bulb Length (Symbol A) of a Plain Bulb is the length from the free end of the Bulb to the connecting unit or to the Case directly, if no connecting means is used. (See Fig. 8.) The Bulb Length of a Union Connected Bulb is the length from the free end of the Bulb to the underside of the seating part. (See Fig. 9.)

5.2 Insertion Length. The Insertion Length (Symbol U) is the length from the free end of the Bulb or Well to, but not including, the external threads or other means of attachment to a vessel. (See Fig. 5.)

5.3 Lagging Extension Length. The Lagging Extension Length (Symbol T) is the length from the lower end of the external threads of a Bushing or Well to the upper end of the portion intended to extend through the lagging of a vessel, less one inch allowance for threads. (See Fig. 5.)

> Note: For purposes of uniform dimensioning of Bushings and Wells having Lagging Extensions, the allowance for thread length is one inch, regardless of pipe thread size.

5.4 Immersion Length. The Immersion Length (Symbol R) is the length from the free end of the Bulb or Well to the point of immersion in the medium, the temperature of which is being measured. (Physically this point may be indistinguishable, but is important for proper accuracy.) (See Fig. 8.)

6. Dimensions

6.1 Jam Nut. The jam nut thread shall be 1 1/4-18 NEF-2. The hexagon size shall be 1 1/4 inch. (See Fig. 9.)

6.2 Seating Part. The Seating Part shall be 1 1/8 ± 1/64 inch outside diameter and have a thickness of $3/16 \begin{smallmatrix} +0 \\ -1/64 \end{smallmatrix}$ inch. (See Fig. 9.)

6.3 Bulb Length. The nominal standard Bulb Lengths shall be 3 1/2, 6, 9, 12, 18, and 24 inches. (See Fig. 9 for actual Bulb Length dimensions.)

6.4 Extension Diameter. The Diameter of the Extension below the seating part on Union Connected Bulbs shall have a maximum outside diameter of 3/4 inch. On Plain Bulbs the Extension shall have a maximum outside diameter of one inch.

6.5 Sensitive Portion Dimensioning. The Sensitive Portion of the Union Connected Bulb is to be dimensioned as shown in Fig. 9. When a bulb guard is used, the Sensitive Portion shall have the same diameter as the Extension.

6.6 Bushings. Dimensions for Bushings are shown in Fig. 10.

6.7 Wells. Nominal Well sizes shall be 3 1/2, 6, 9, 12, 18 and 24 inches. Where Lagging Extension is required, this length shall be 2 1/2 inches for the 6 inch Well and 3 inches for all sizes above 6 inch length. (See Fig. 11.) Well style numbers are designated in Table 1.

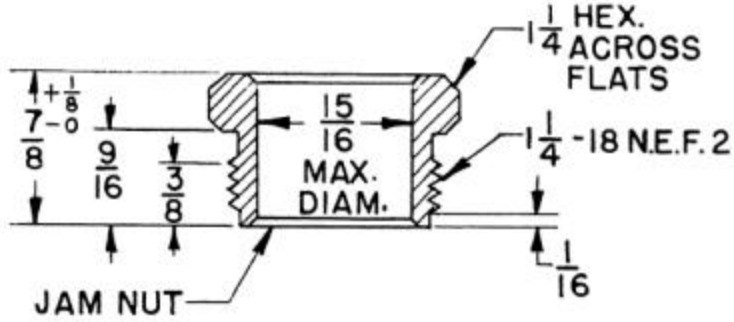

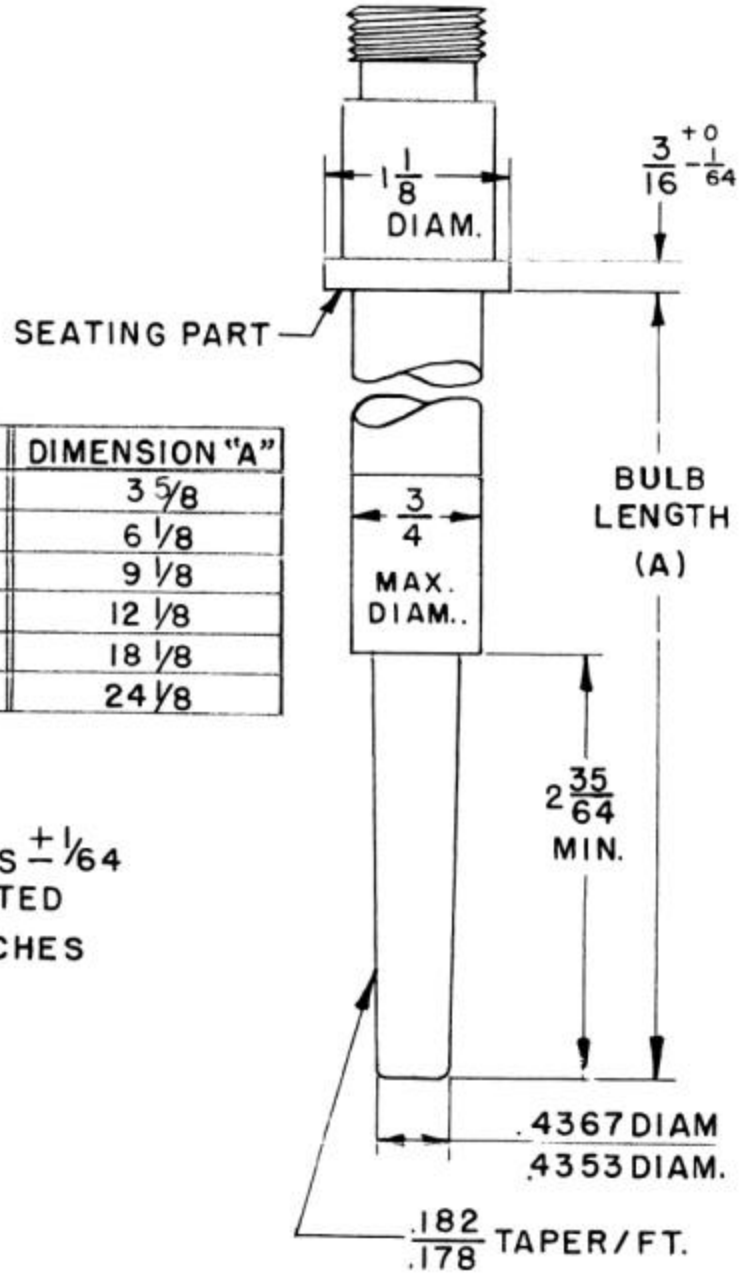

NOMINAL BULB LENGTH	DIMENSION "A"
3 1/2	3 5/8
6	6 1/8
9	9 1/8
12	12 1/8
18	18 1/8
24	24 1/8

NOTE :-
FRACTIONAL DIMENSIONS ± 1/64
UNLESS OTHERWISE NOTED
ALL DIMENSIONS IN INCHES

UNION CONNECTED BULB DIMENSIONS
FIG. NO. 9

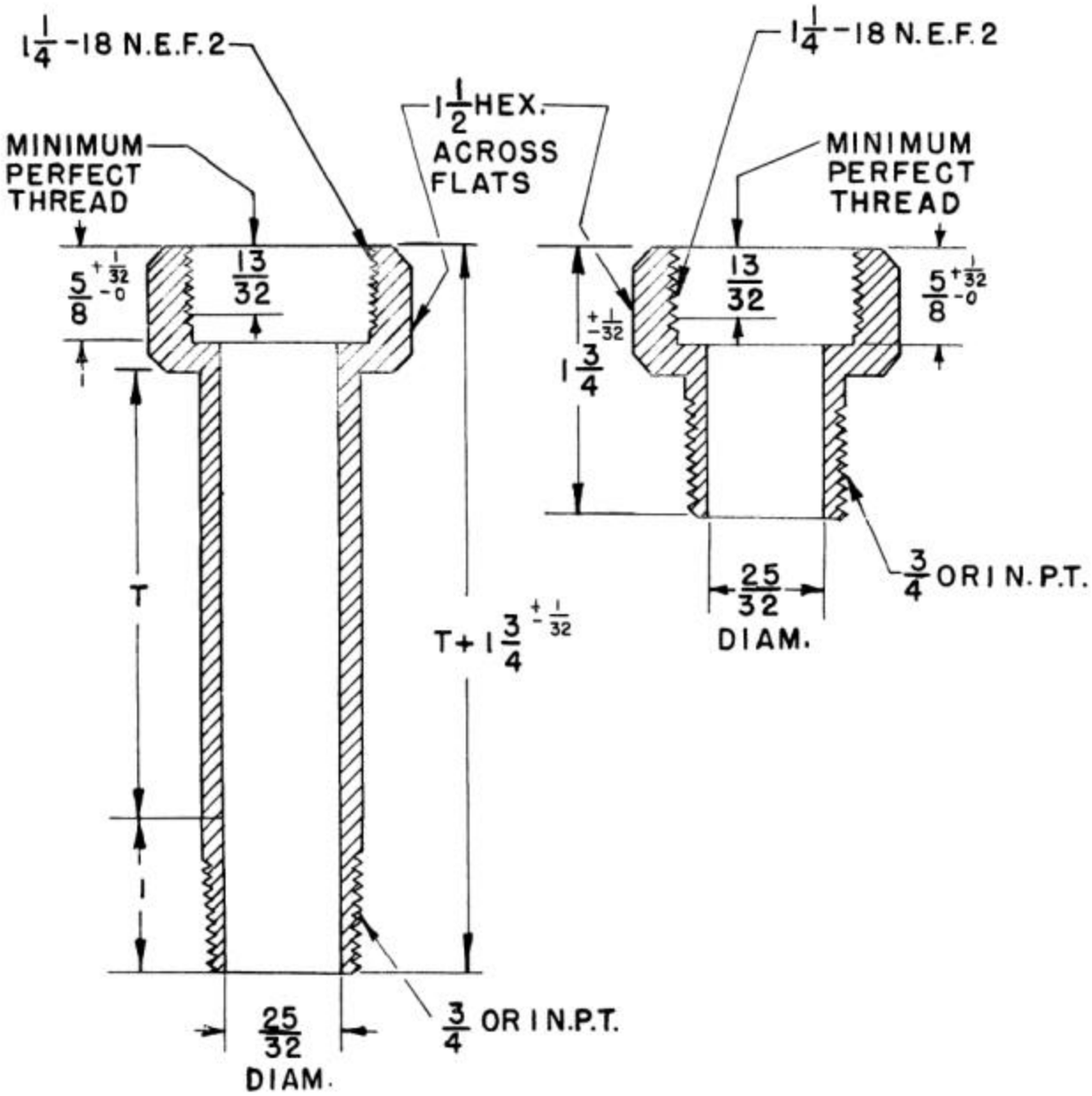

NOTE:-

FRACTIONAL DIMENSIONS $\pm \frac{1}{64}$ UNLESS OTHERWISE NOTED.

ALL INTERNAL DIAMETERS TO BE CONCENTRIC WITHIN .010 T.I.R.

ALL DIMENSIONS IN INCHES

BUSHING DIMENSIONS

FIG. NO. 10

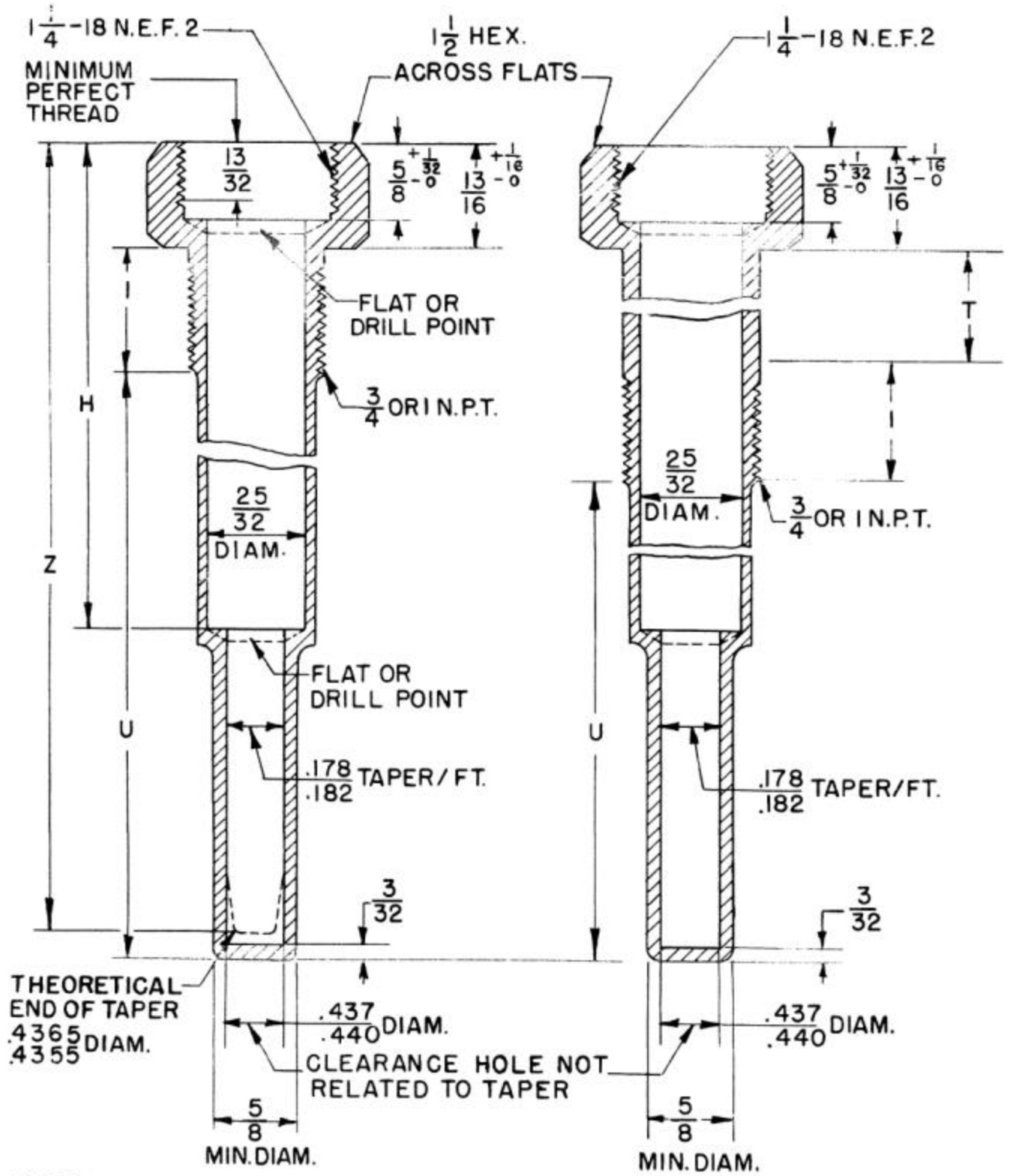

NOTE:-
FRACTIONAL DIMENSIONS $\pm\frac{1}{64}$ UNLESS OTHERWISE NOTED.
ALL INTERNAL DIAMETERS TO BE CONCENTRIC WITHIN .010 T.I.R.
REFER TO TABLE I FOR OTHER DIMENSIONS

ALL DIMENSIONS IN INCHES

WELL DIMENSIONS

FIG. NO. 11

TABLE I

WELL DIMENSIONS - INCHES

DIMENSIONS FOR ORDERING				DIMENSIONS FOR REFERENCE ONLY	
WELL STYLE	NOMINAL THERMOMETER BULB LENGTH	INSERTION LENGTH U	LAGGING EXTENSION LENGTH T	H	Z
3 1/2	3 1/2	2 9/16	0	1 43/64	4 9/64
6	6	5 1/16	0	4 11/64	6 41/64
6E	6	2 9/16	2 1/2	4 11/64	6 41/64
9	9	8 1/16	0	7 11/64	9 41/64
9E	9	5 1/16	3	7 11/64	9 41/64
12	12	11 1/16	0	10 11/64	12 41/64
12E	12	8 1/16	3	10 11/64	12 41/64
18	18	17 1/16	0	16 11/64	18 41/64
18E	18	14 1/16	3	16 11/64	18 41/64
24	24	23 1/16	0	22 11/64	24 41/64
24E	24	20 1/16	3	22 11/64	24 41/64